Podium board

Podium L40 white marble
- Item no. 3002

Podium L65 white marble
- Item no. 3004

Podium L90 white marble
- Item no. 3006

Podium L40 black basalt stone
- Item no. 3003

Podium L65 black basalt stone
- Item no. 3005

Podium L90 black basalt stone
- Item no. 3007

Product type: Podium board series
Design: Jomi Evers, 2022
Materials: White Carrara marble stone (white version), or black basalt stone (black version)
Colours: White marble or black basalt
Net weight L40: 3.0 kg
Net weight L65: 4.5 kg
Net weight L90: 6.5 kg
Minimum order size: 2
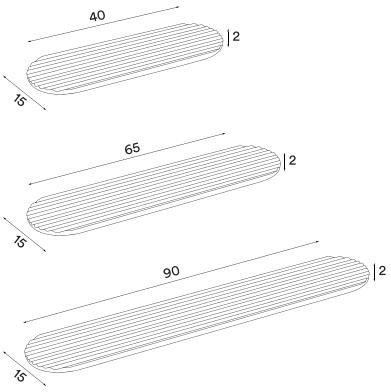
Dimensions (cm):